BIOENGINEERING: BIOINFORMATICS (BINF) COURSE FLOWCHART

Not Accredited by the Engineering Accreditation Commission of the Accreditation Board for Engineering & Technology [EAC/ABET] ~ REV.7-22-2024

(ALL COURSES REQUIRED FOR THE MAJOR MUST BE TAKEN FOR LETTER GRADES.)

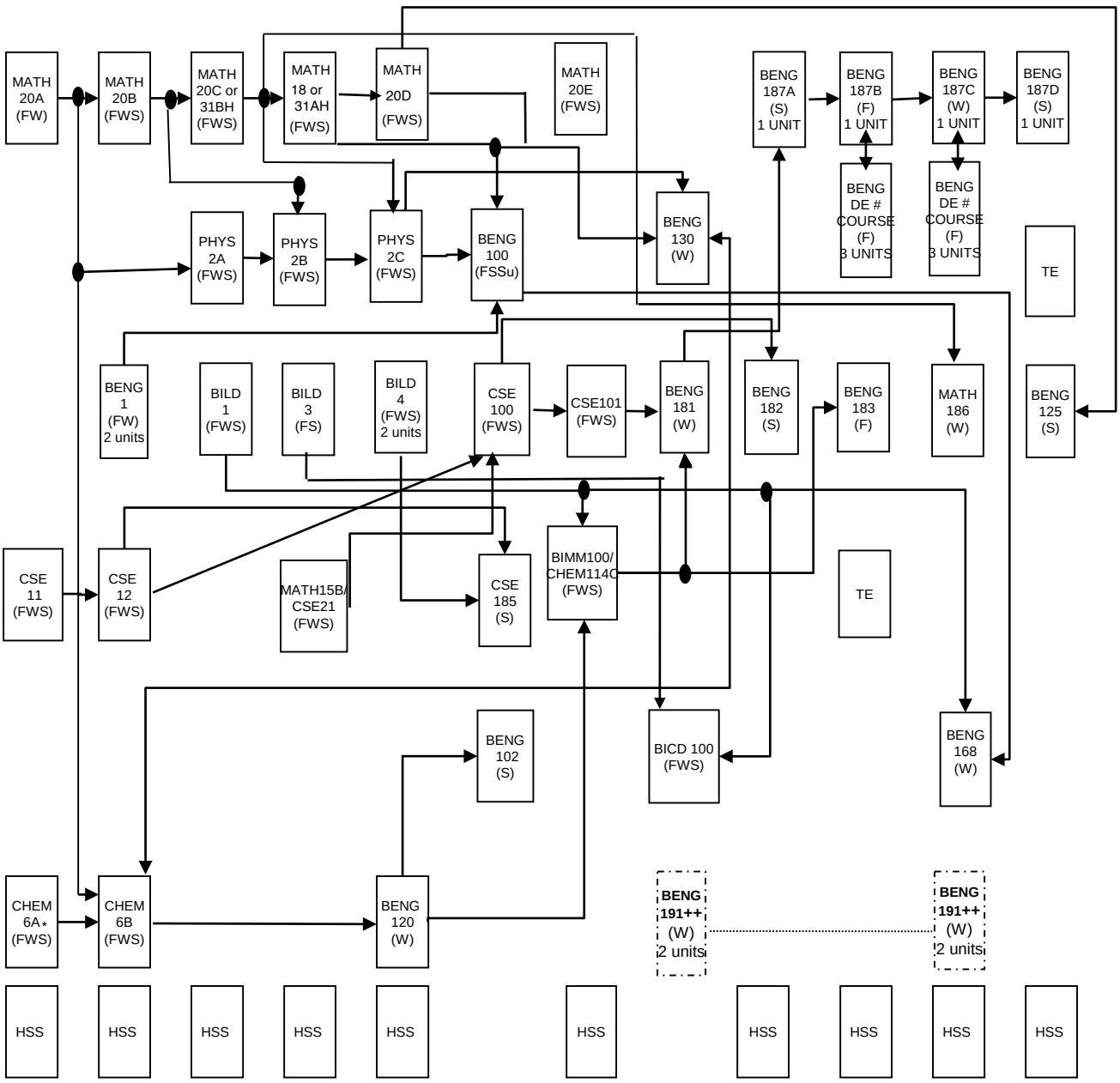

++BENG 191 may be taken <u>once</u> and is <u>recommended for Juniors and Seniors</u>, but <u>not</u> required.

<u>Electives:</u>

BENG 199

*Prerequisites for CHEM 6A: CHEM 4, or AP Chemistry score of 3, or Math Placement Exam qualifying score, or AP Calculus AB score of 2, or MATH 3C or higher.