BIOENGINEERING: BIOINFORMATICS (BINF) COURSE FLOWCHART

Not Accredited by the Engineering Accreditation Commission of the Accreditation Board for Engineering & Technology [EAC/ABET]

~REV. 6/16/2014~

(ALL COURSES REQUIRED FOR THE MAJOR MUST BE TAKEN FOR LETTER GRADES.)

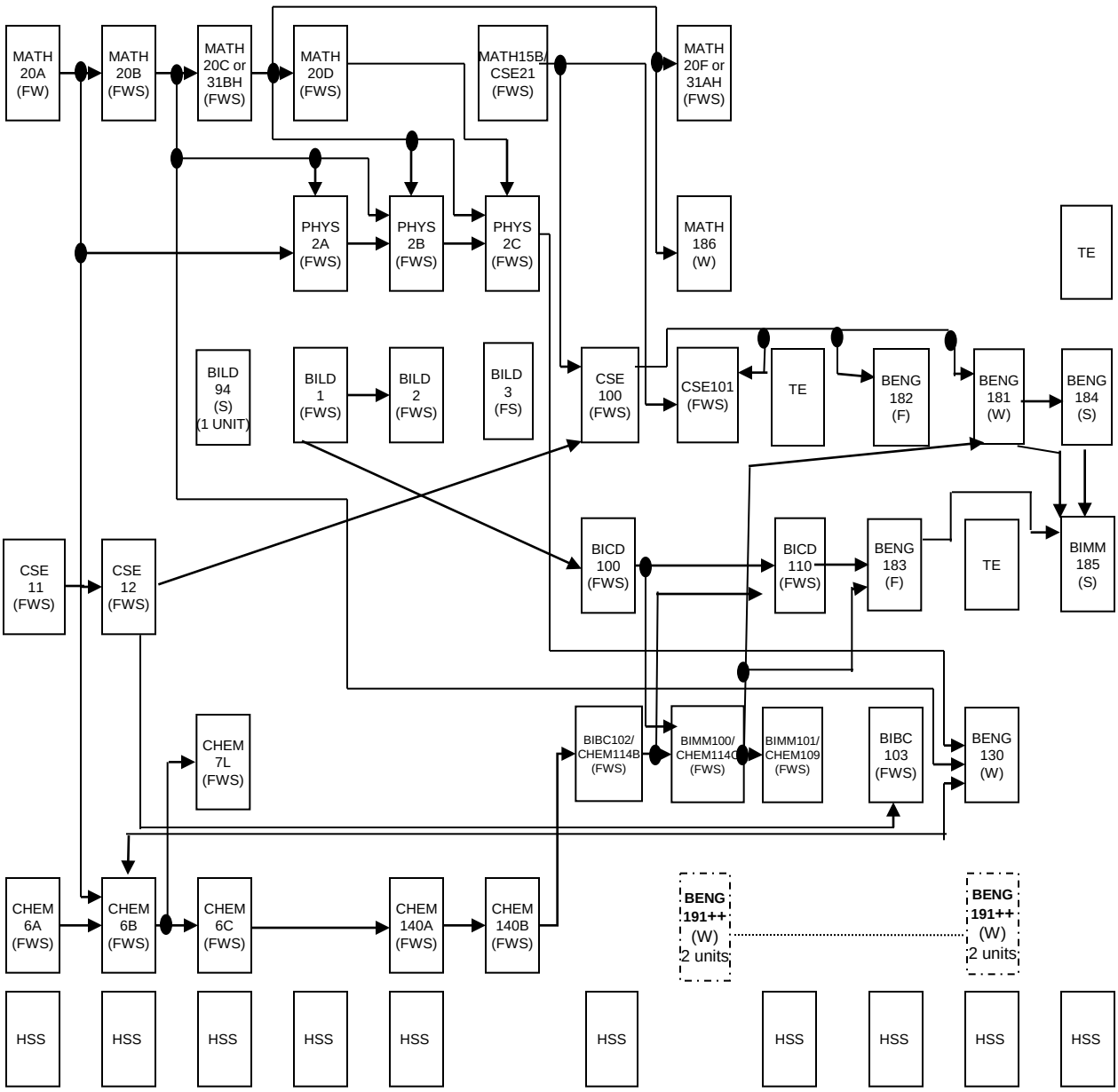

++BENG 191 may be taken once and is recommended for Juniors and Seniors, but not required.

Electives:

BENG 199